Fly-By-Wire
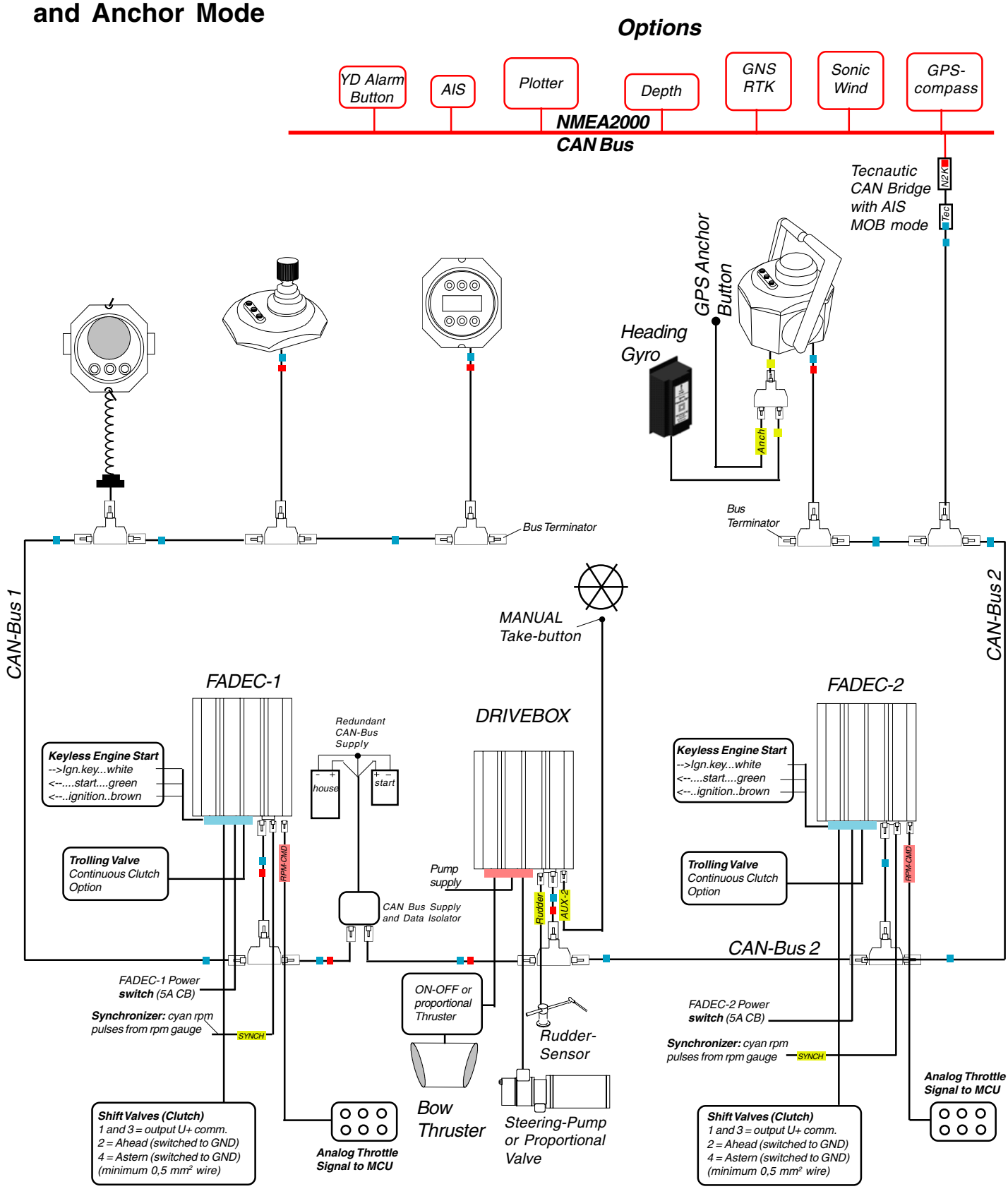
Electronic Throttle and Shift
Joystick Autopilot
Dual CAN-Bus, GPS Hover and Anchor Mode